Digital Electronic Circuits (EC2L004)

Lecture 6:Gate-Level minimization-II

Four-Variable K-Map

m_0	m_1	m_3	m_2
m_4	m_5	m_7	m_6
m_{12}	m_{13}	m_{15}	m_{14}
m_8	m_9	m_{11}	m_{10}

(a)

$wx \backslash yz$	00	01	11	10
00	m_0 $w'x'y'z'$	m_1 $w'x'y'z$	m_3 $w'x'yz$	m_2 $w'x'yz'$
01	m_4 $w'xy'z'$	m_5 $w'xy'z$	m_7 $w'xyz$	m_6 $w'xyz'$
11	m_{12} $wxy'z'$	m_{13} $wxy'z$	m_{15} $wxyz$	m_{14} $wxyz'$
10	m_8 $wx'y'z'$	m_9 $wx'y'z$	m_{11} $wx'yz$	m_{10} $wx'yz'$

(b)

Example:14

- Simplify the Boolean function

  $F(w, x, y, z) = \Sigma(0, 1, 2, 4, 5, 6, 8, 9, 12, 13, 14)$

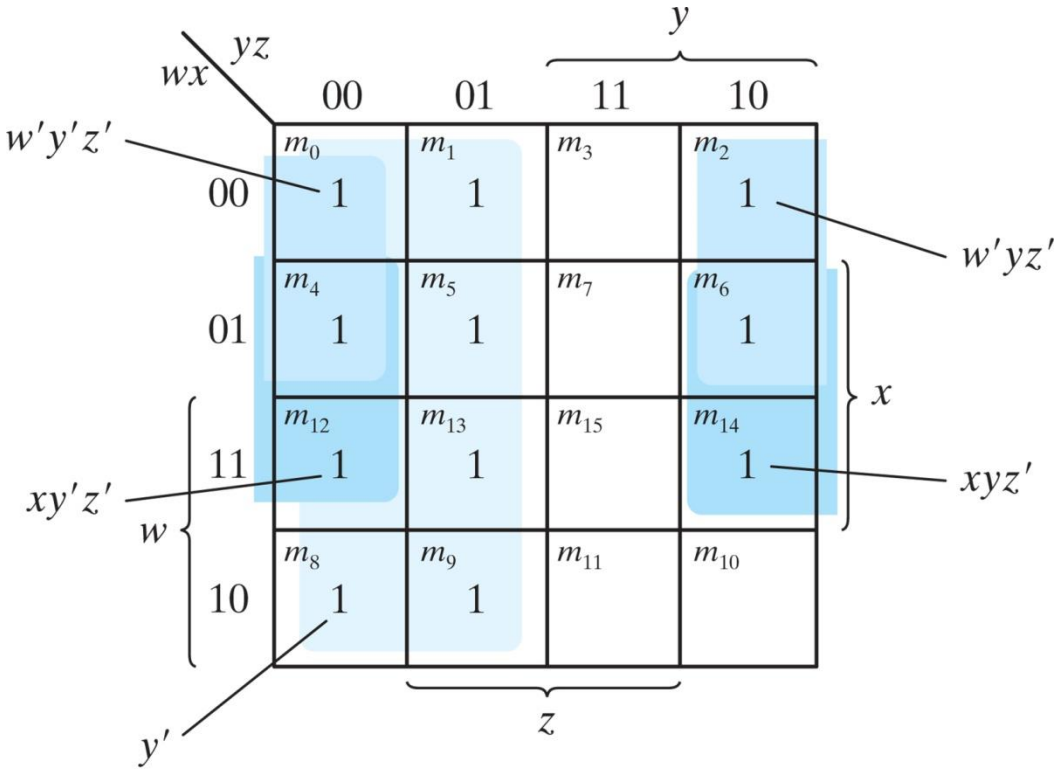

Note: $w'y'z' + w'yz' = w'z'$

$xy'z' + xyz' = xz'$

$F = y' + w'z' + xz'$

Example: 15

- Simplify the Boolean function

$$F = A'B'C' + B'CD' + A'BCD' + AB'C'$$

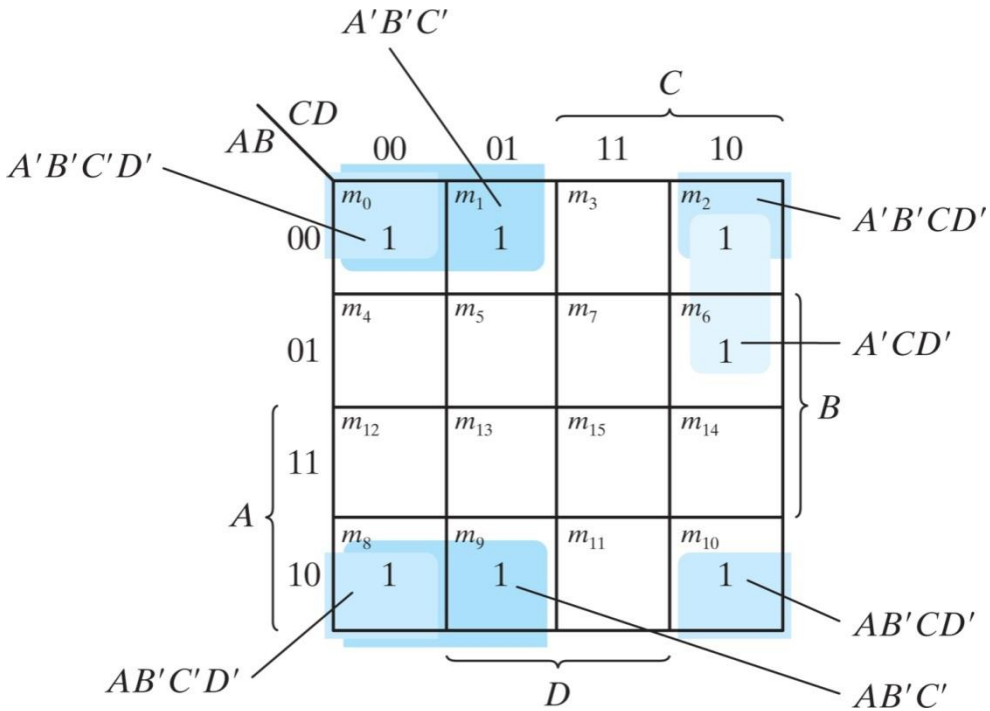

Note: $A'B'C'D' + A'B'CD' = A'B'D'$
$AB'C'D' + AB'CD' = AB'D'$
$A'B'D' + AB'D' = B'D'$
$A'B'C' + AB'C' = B'C'$

$$F = B'D' + B'C' + A'CD'$$

Four-variable K-Map: Observations

- One square represents one minterm -> a term of 4 literals
- Two adjacent squares -> a term of 3 literals
- Four adjacent squares -> a term of 2 literal
- Eight adjacent squares -> a term of 1 literal
- Sixteen adjacent squares -> the function equals to 1

Prime Implicants:

- The procedure for combing adjacent squares can be made more systematic by using prime implicants and essential prime implicants.

- A *Prime Implicant* is a product term obtained by combining the maximum possible number of adjacent squares in the map.

- If a minterm in a square is covered by only one prime implicant, that prime implicant is said to be “essential”

Example:16

Simplify the following function

$$F(A,B,C,D) = \Sigma(0, 2, 3, 5, 7, 8, 9, 10, 11, 13, 15)$$

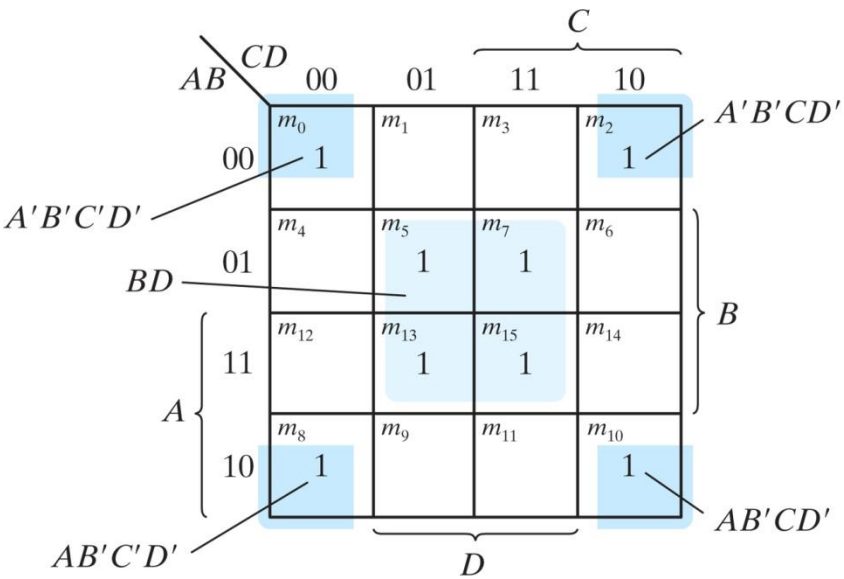

Note: $A'B'C'D' + A'B'CD' = A'B'D'$
$AB'C'D' + AB'CD' = AB'D'$
$A'B'D' + AB'D' = B'D'$

(a) Essential prime implicants BD and $B'D'$

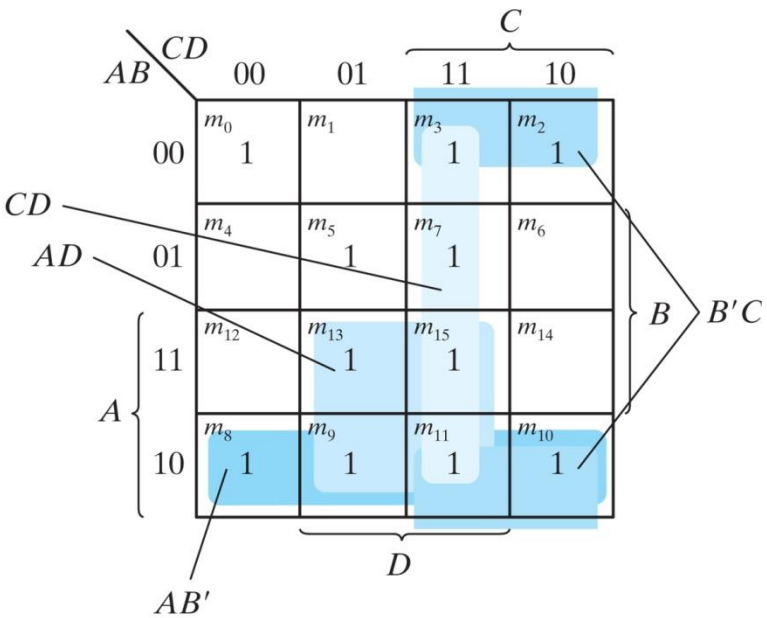

(b) Prime implicants CD, $B'C$, AD, and AB'

Five-Variable Map

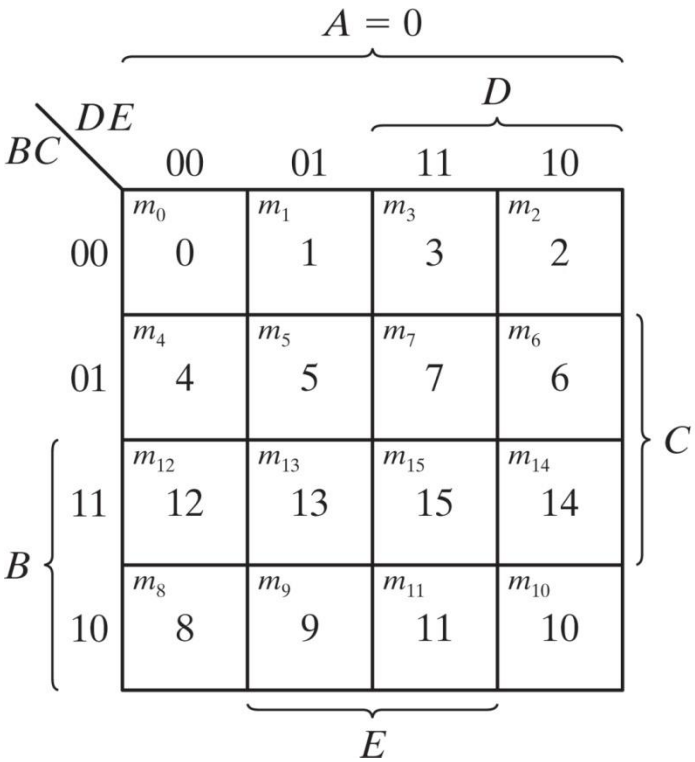

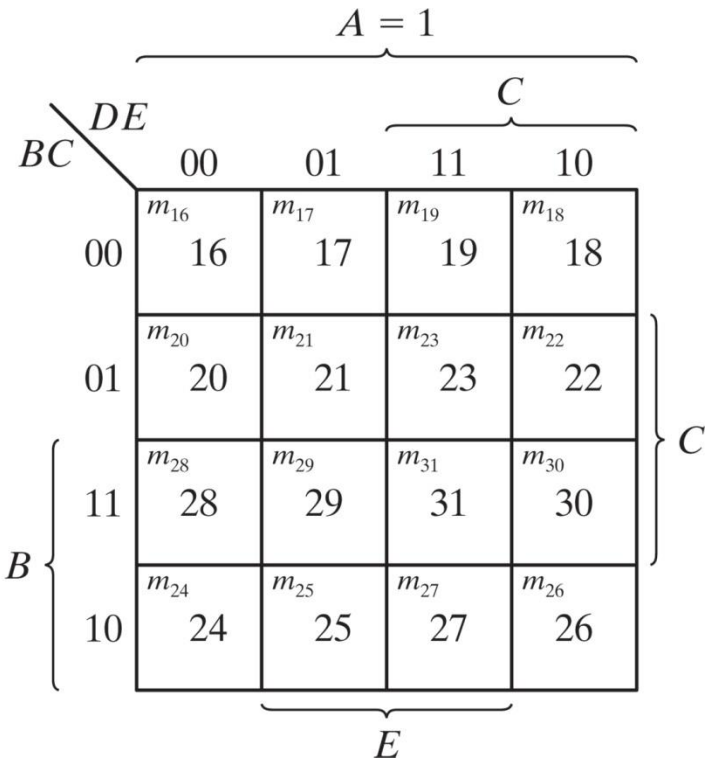

Example 17:

Simplify $F(A,B,C,D,E) = \Sigma(0,2,4,6,9,13,21,23,25,29,31)$

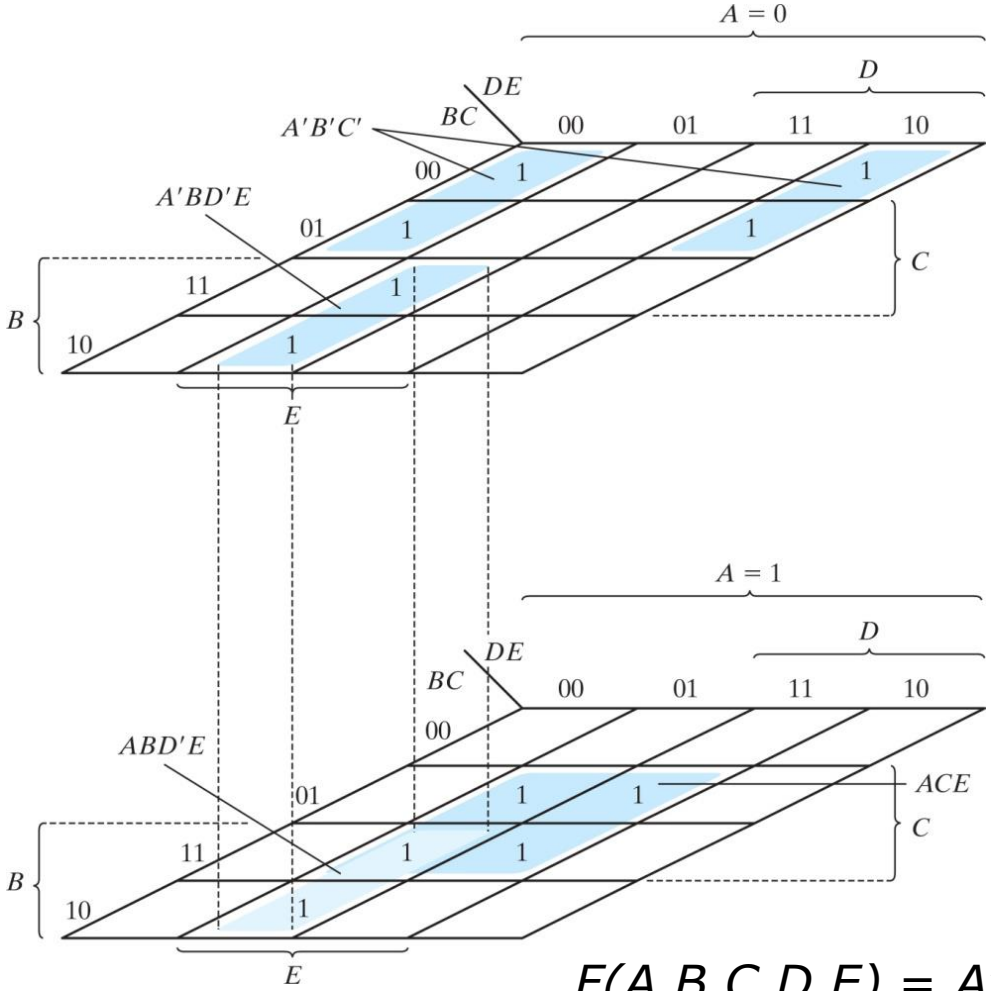

$F(A,B,C,D,E) = A'B'E' + BD'E + ACE$

Products of Sums Simplification

- Example 17: Simplify the following function into a) sop, and b) pos form: $F(A, B, C, D) = \Sigma(0, 1, 2, 5, 8, 9, 10)$

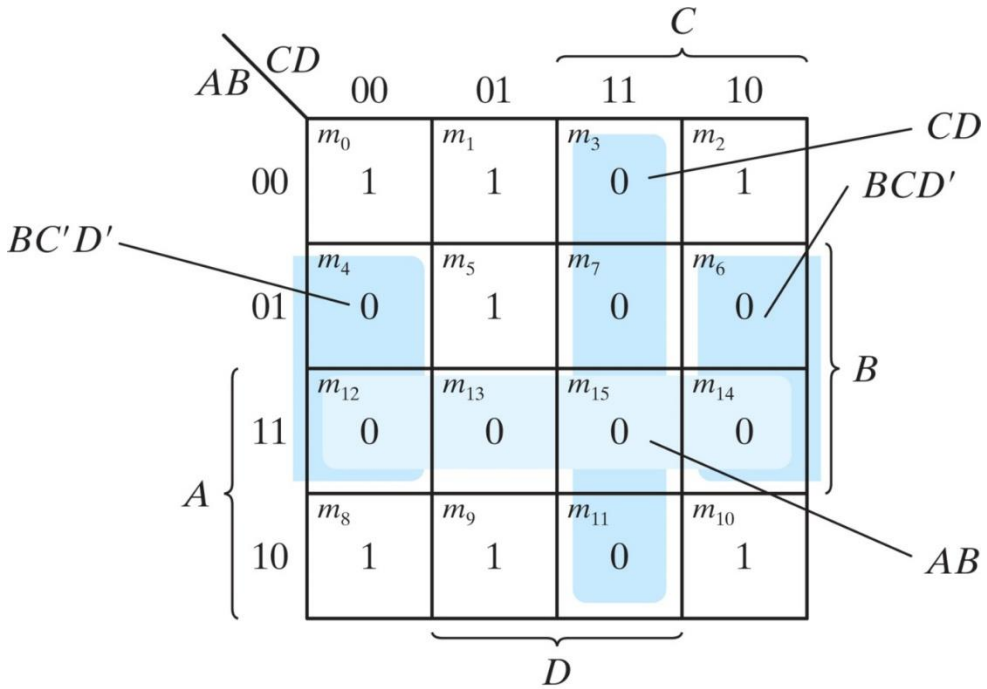

Note: $BC'D' + BCD' = BD'$

, $F(A, B, C, D) = \Sigma(0, 1, 2, 5, 8, 9, 10) = B'D' + B'C' + A'C'D = (A' + B')(C' + D')\ (B' + D)$

SOP and POS gate implementation

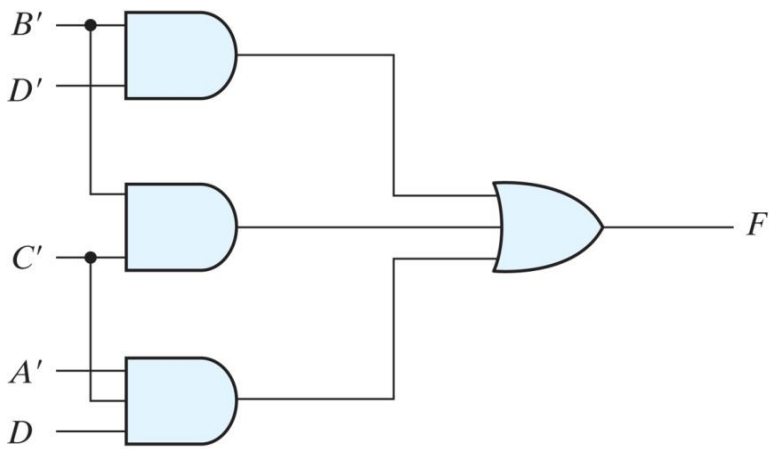

(a) $F = B'D' + B'C' + A'C'D$

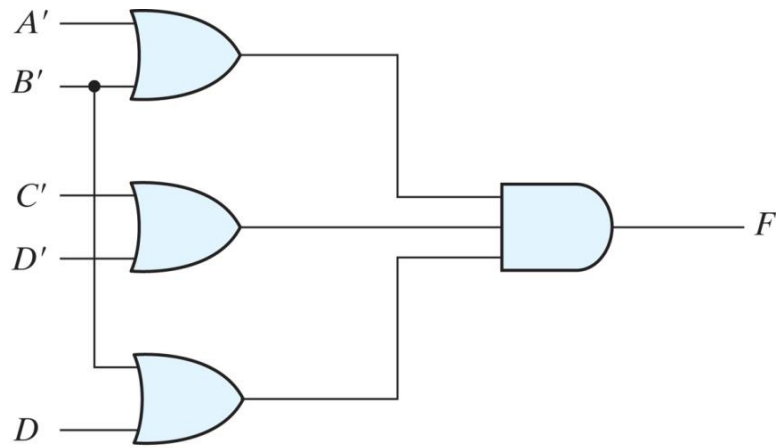

(b) $F = (A' + B')(C' + D')(B' + D)$